Part of the DePuy Synthes Cannulated Screw System

6.5 mm and 7.3 mm Cannulated Screws

Surgical Technique

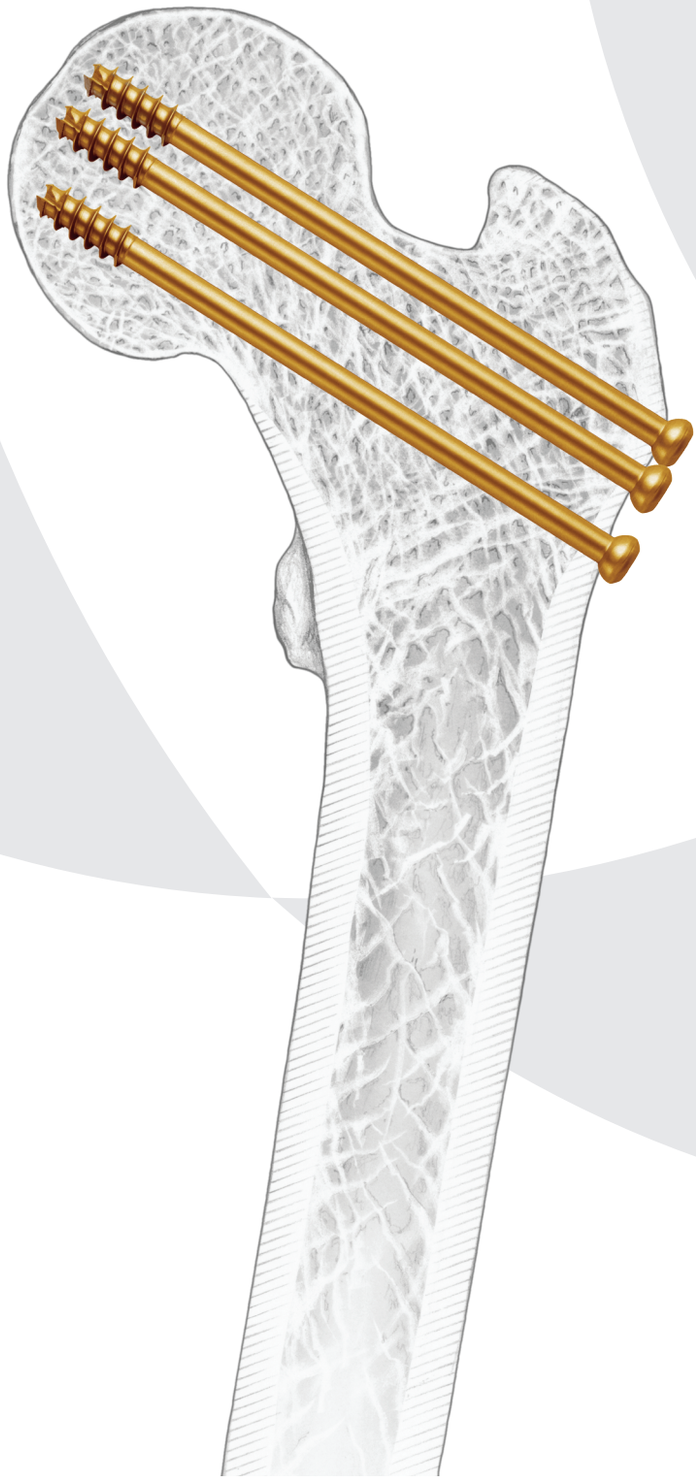

DePuy Synthes

PART OF THE Johnson&Johnson FAMILY OF COMPANIES

Table of Contents

Introduction	6.5 mm and 7.3 mm Cannulated Screws	2
	AO Principles	3
	Indications	4
Surgical Technique	Surgical Technique Information	5
	Percutaneous Technique	6
	Open Technique	10
	Implant Removal	12
Product Information	Implants	13
	Instruments	14
	Set Lists	18

MR Information
The 6.5 mm and 7.3 mm Cannulated Screw System has not been evaluated for safety and compatibility in the MR environment. It has not been tested for heating, migration or image artifact in the MR environment. The safety of the 6.5 mm and 7.3 mm Cannulated Screw System in the MR environment is unknown. Scanning a patient who has this device may result in patient injury.

Image intensifier control

6.5 mm and 7.3 mm Cannulated Screws

Features

- Cannulated shaft accepts 2.8 mm diameter guide wires (threaded and nonthreaded wires available)
- Hemispherical head ensures optimal annular contact with DePuy Synthes washers and plates when screws are angled
- Low-profile head helps reduce possibility of soft tissue irritation
- Reverse-cutting flutes assist in screw removal
- Choice of thread lengths offers best fit of threads into far bone fragment, for greater interfragmentary compression
- Cancellous thread profile uses deep cutting threads with a large pitch to increase resistance to pullout. The large pitch also accelerates screw insertion and removal
- Self-drilling, self-tapping screw tip facilitates screw insertion by eliminating the need for predrilling and tapping in most cases

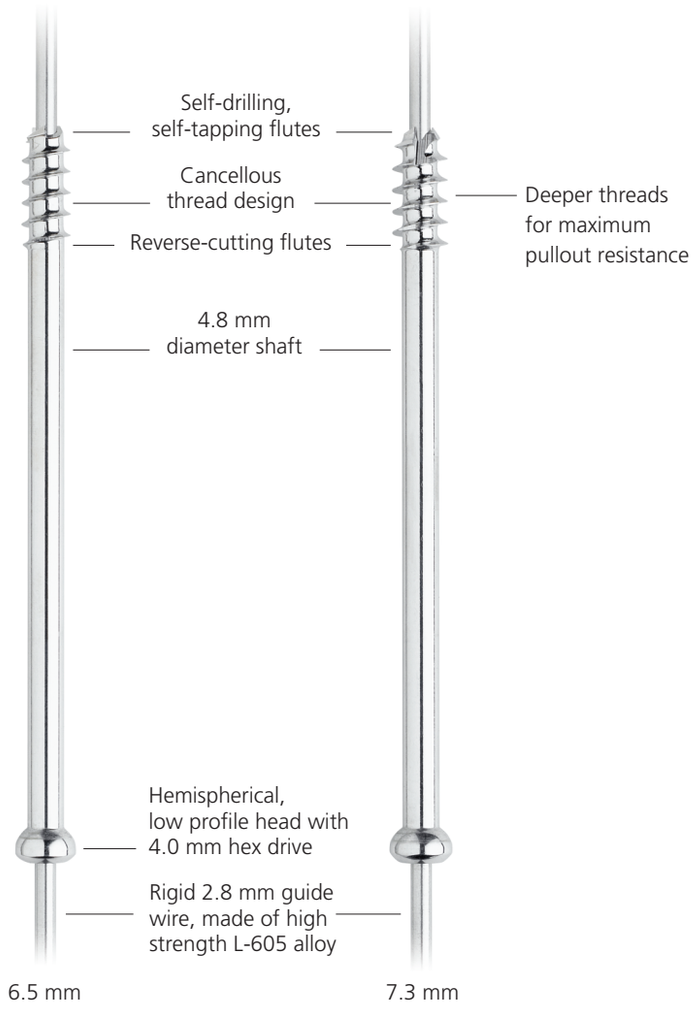

Thread lengths

16 mm thread

32 mm thread

Fully threaded

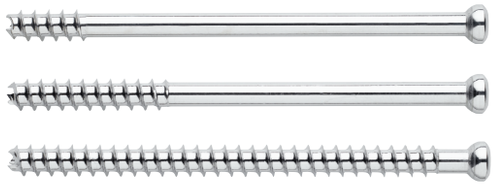

Materials

Implant quality 316L stainless steel

Titanium alloy (Ti-6Al-7Nb)

AO Principles

In 1958, the AO formulated four basic principles, which have become the guidelines for internal fixation.[1, 2]

Anatomic reduction
Fracture reduction and fixation to restore anatomical relationships.

Early, active mobilization
Early and safe mobilization and rehabilitation of the injured part and the patient as a whole.

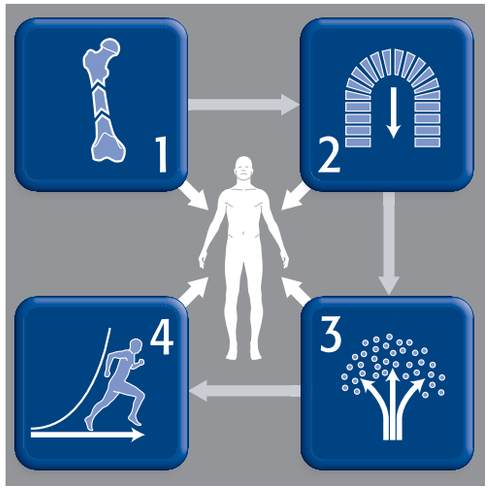

Stable fixation
Fracture fixation providing absolute or relative stability, as required by the patient, the injury, and the personality of the fracture.

Preservation of blood supply
Preservation of the blood supply to soft tissues and bone by gentle reduction techniques and careful handling.

1. Müller ME, Allgöwer M, Schneider R, Willenegger H. *Manual of Internal Fixation*. 3rd ed. Berlin, Heidelberg, New York: Springer-Verlag; 1991.
2. Rüedi TP, RE Buckley, CG Moran. *AO Principles of Fracture Management*. 2nd ed. Stuttgart New York: Thieme; 2007.

Indications

The DePuy Synthes 6.5 mm and 7.3 mm Cannulated Screws are intended for fixation of fractures, fusions, osteotomies, nonunions, and malunions of long bones and long bone fragments, pelvis, sacrum, and the bones of the foot in adults and in both children (2-12 years) and adolescents (12-21 years) in which growth plates have fused or in which growth plates will not be crossed by screw fixation.

6.5 mm Cannulated Screws are also indicated for:
- Femoral neck fractures
- Slipped capital femoral epiphyses
- As an adjunct to DHS in basilar neck fractures
- Tibial plateau fractures
- Ankle arthrodeses
- Pediatric femoral neck fractures
- Intercondylar femur fractures
- Sacroiliac joint disruptions
- Subtalar arthrodeses

7.3 mm Cannulated Screws are also indicated for:
- Slipped capital femoral epiphysis
- Ankle athrodesis
- Subtalar arthrodesis

Warning: This device is not approved for screw attachment or fixation to the posterior elements (pedicles) of the cervical, thoracic or lumbar spine.

Femoral neck fractures

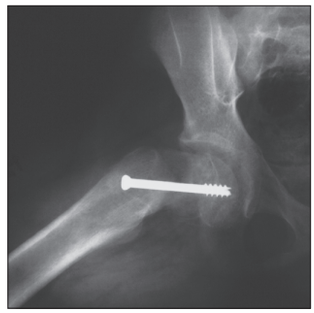

Slipped capital femoral epiphyses

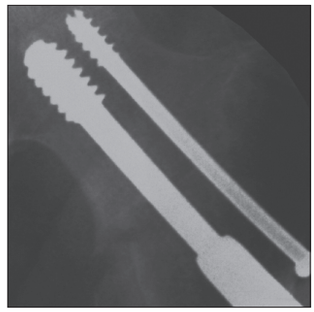

As an adjunct to DHS in basilar neck fractures

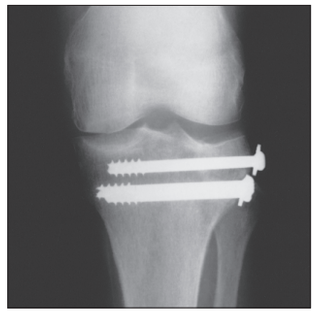

Tibial plateau fractures

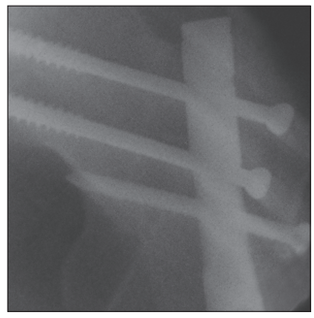

Miss-A-Nail

Surgical Technique Information

Cleaning cannulations

Instruments	
310.63	5.0 mm Cannulated Drill Bit
311.689	Cannulated Tap
319.24	2.9 mm Cleaning Brush
319.46	2.8 mm Cleaning Stylet

Note: Cleaning the cannulation in each instrument is imperative for proper function.

Instruments should be cleared intraoperatively with the 2.8 mm cleaning stylet to prevent accumulation of debris in the cannulation and potential binding of the instruments about the guide wire. Postoperatively, they should be cleaned with both the cleaning stylet and cleaning brush.

Drilling and tapping

The self-drilling, self-tapping flutes of the 6.5 mm and 7.3 mm cannulated screws make predrilling and tapping unnecessary in most cases, but in very dense bone, it may be helpful to use the 5.0 mm cannulated drill bit and the cannulated tap.

Considerations for selecting the 6.5 mm versus the 7.3 mm cannulated screw

Dimensionally, the thread and head diameters of the 6.5 mm cannulated screw are smaller than those of the 7.3 mm cannulated screw. The core and shaft diameters are the same.

With regard to screw performance, the deep cutting threads on the 7.3 mm cannulated screw give it greater pullout resistance (about 10%), whereas the 6.5 mm screw is optimized for use in a smaller bone space, with multiple adjacent screws, and through plates. Bending strength, insertion torque and torsional strength are essentially equivalent.

1. Insert guide wire

Instruments	
292.68	2.8 mm Threaded Guide Wire
312.01	2.8 mm Adjustable Parallel Wire Guide
312.02	2.8 mm Trocar
312.05	12.0 mm/8.5 mm Protection Sleeve
312.08	8.5 mm/2.8 mm Wire Sleeve
312.692	Multiple Wire Guide

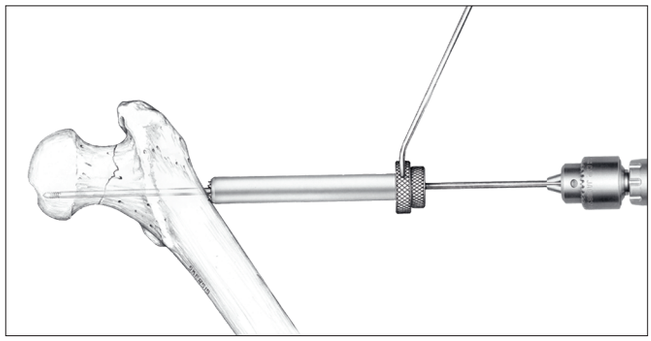

Insert the percutaneous sleeve assembly through a stab incision and through the soft tissue to the bone. Remove the trocar. Under power, insert the 2.8 mm threaded guide wire through the inner sleeve into the bone. Check for appropriate depth under image intensification.

Note: When using the cannulated instrument shafts over the extra long 450 mm guide wire, a cannulated coupling device or Jacobs Chuck® is required.

Option 1a: Insert additional parallel guide wire(s) with adjustable parallel wire guide

Use the 2.8 mm adjustable parallel wire guide to place parallel wires at various distances from the first wire. Place the fixed sleeve over the previously inserted wire and adjust the movable sleeve to the desired position and distance. Tighten the knurled nut on the adjustable sleeve to lock it in place. Insert the desired number of additional wires.

Note: The placement of three guide wires is recommended to achieve adequate rotational stability.

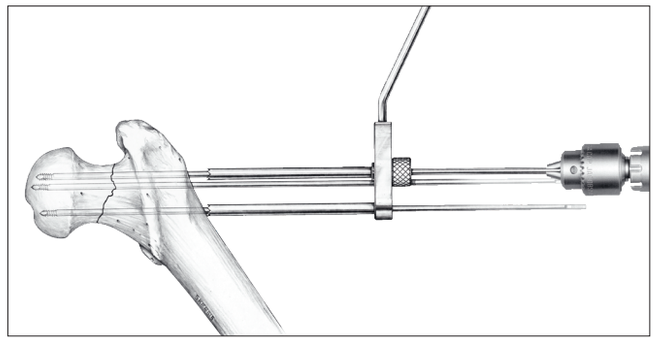

Option 1b: Insert multiple parallel guide wire(s) using multiple wire guide

Insert the multiple wire guide and trocar through a stab incision and through the soft tissue to the bone. Remove the trocar. Select hole pattern and insert 2.8 mm guide wires through the preselected holes. Once all wires are placed, use the protection sleeve to protect the soft tissue while measuring and inserting screws.

Note: The multiple wire guide will allow placement of washers when wires are placed through nonadjacent holes. Placement through adjacent holes will allow clearance for screws but not for washers.

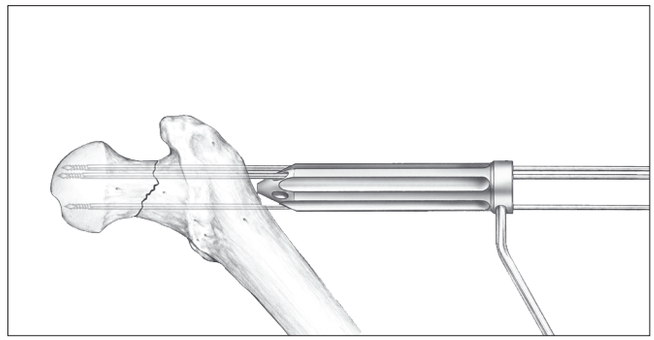

2. Countersink (optional)

Instrument	
310.78	Cannulated Countersink

When a lower screw profile is necessary, use the cannulated countersink to create a recess for the screw head.

Note: If the countersink fails to bite, the near cortex can be predrilled using the cannulated drill bit.

3. Measure for screw length

Instrument	
319.70	Cannulated Screw Measuring Device

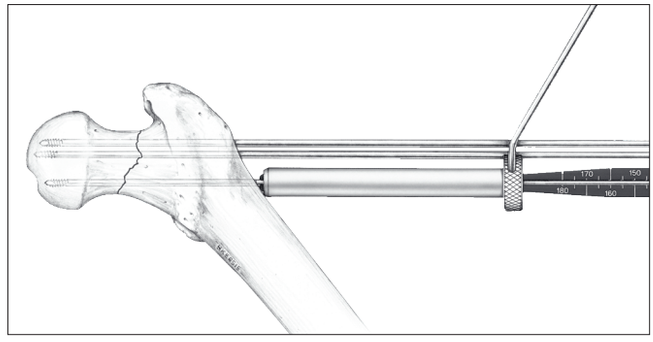

Remove wire sleeves or guides and slide the tapered end of the cannulated screw measuring device over the guide wire and through the protection sleeve to the bone. Read the scale at the end of 300 mm wires, or at the 300 mm calibration marking on 450 mm wires, to determine insertion depth of wire and appropriate screw length.

Notes:

- **The reading indicates the screw length that will place the screw at the tip of the guide wire. Subtract appropriately for any anticipated interfragmentary compression resulting from screw insertion.**
- **Only use the guide wire in its original length to ensure correct measurement.**
- **If planning to countersink, this should be done prior to inserting the cannulated screw measuring device.**

4. Insert screw

Instruments	
310.495	7.3 mm Cannulated Drill Bit
310.63	5.0 mm Cannulated Drill Bit
314.05	Cannulated Hexagonal Screwdriver
314.11	Holding Sleeve
314.23	Cannulated Hexagonal Screwdriver Shaft

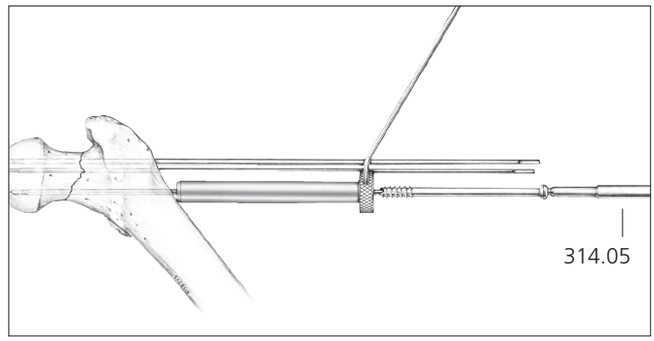

Using the cannulated hexagonal screwdriver, place the appropriate length screw over the guide wire through the protection sleeve, and insert into the bone. Remove and discard the guide wire.

For power insertion of screws, use the cannulated hexagonal screwdriver shaft and holding sleeve. Always use the cannulated hexagonal screwdriver for final, manual seating of the screw.

Use of a washer should be considered when using the 7.3 mm drill bit to make a gliding hole, or inserting the screw into osteoporotic bone.

Note: In very dense bone, it may be helpful to predrill the cortex with the 5.0 mm drill bit.

Open Technique

1. Set angle of variable angle wire guide

Instrument	
312.07	Variable Angle Wire Guide

Prior to inserting guide wires, place the variable angle wire guide directly on the bone and select the insertion angle.

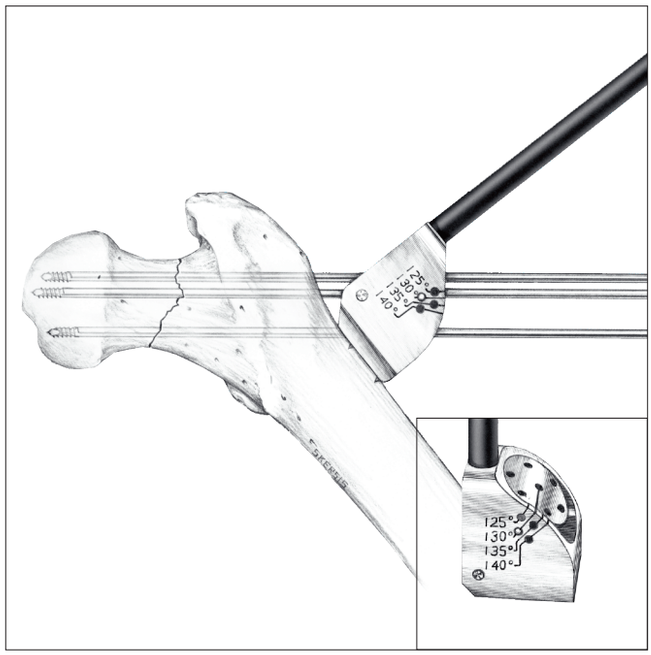

2. Insert guide wires and measure

Select a hole pattern and insert the 2.8 mm guide wires through the preselected holes. Once all wires are placed, use the protection sleeve to protect the soft tissue while measuring for screw length.

Note: The variable angle wire guide will allow placement of washers when wires are placed through nonadjacent holes. Placement through adjacent holes will allow clearance for screws but not for washers.

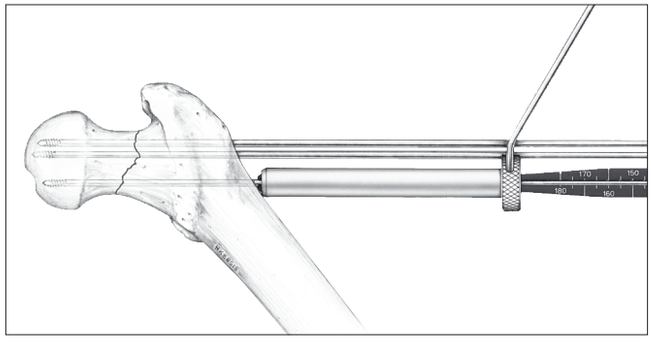

3. Insert screws

Instrument	
314.05	Cannulated Hexagonal Screwdriver

Using the cannulated hexagonal screwdriver, place the appropriate length screw over the guide wire and through the protection sleeve, and insert into the bone. Remove and discard the guide wire.

For power insertion of screws, use the cannulated hexagonal screwdriver shaft and holding sleeve. Always use the cannulated hexagonal screwdriver for final, manual seating of the screw.

Use of a washer should be considered when using the 7.3 mm drill bit to make a gliding hole, or inserting the screw into osteoporotic bone.

Note: In very dense bone, it may be helpful to predrill the cortex with the 5.0 mm drill bit.

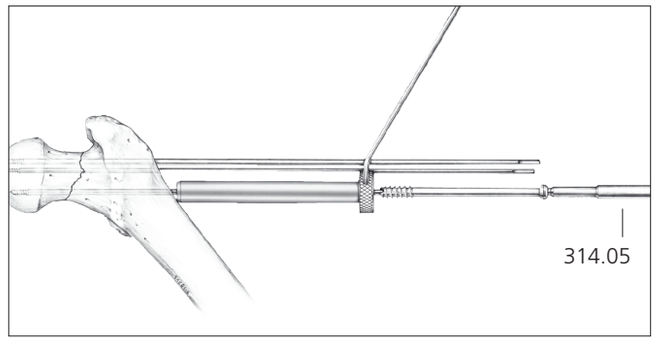

Implant Removal

Instruments

313.93	Solid Hexagonal Screwdriver, 4.0 mm width across flats
314.04	Solid Hexagonal Screwdriver Shaft, 4.0 mm width across flats
393.10	Universal Chuck with T-Handle

Expose the screw head and remove the screws using the special screwdriver for the removal of cannulated screws.

Precaution: Do not use the cannulated screwdriver for implant removal.

Implants in the 6.5 mm and 7.3 mm Cannulated Screw System

Stainless steel and titanium

6.5 mm Cannulated Screws, 16 mm thread length
- 30 mm–150 mm lengths in 5 mm increments
- 160 mm–180 mm lengths in 10 mm increments
- 316L stainless steel or titanium alloy (Ti-6Al-7Nb)

6.5 mm Cannulated Screws, 32 mm thread length
- 45 mm–150 mm lengths in 5 mm increments
- 160 mm–180 mm lengths in 10 mm increments
- 316L stainless steel or titanium alloy (Ti-6Al-7Nb)

6.5 mm Cannulated Screws, fully threaded
- 20 mm–130 mm lengths in 5 mm increments
- 140 mm–180 mm lengths in 10 mm increments
- 316L stainless steel or titanium alloy (Ti-6Al-7Nb)

7.3 mm Cannulated Screws, 16 mm thread length
- 30 mm–150 mm lengths in 5 mm increments
- 160 mm–180 mm lengths in 10 mm increments
- 316L stainless steel or titanium alloy (Ti-6Al-7Nb)

7.3 mm Cannulated Screws, 32 mm thread length
- 45 mm–150 mm lengths in 5 mm increments
- 160 mm–180 mm lengths in 10 mm increments
- 316L stainless steel or titanium alloy (Ti-6Al-7Nb)

7.3 mm Cannulated Screws, fully threaded
- 20 mm–130 mm lengths in 5 mm increments
- 140 mm–180 mm lengths in 10 mm increments
- 316L stainless steel or titanium alloy (Ti-6Al-7Nb)

Washer, 13.0 mm
- To prevent screw head from sinking into osteoporotic bone
- 316L stainless steel or commercially pure (CP) titanium

Instruments

292.68	2.8 mm Threaded Guide Wire, 300 mm	
310.495	7.3 mm Cannulated Drill Bit, large quick coupling	
310.63	5.0 mm Cannulated Drill Bit, large quick coupling	
310.78	Cannulated Countersink	
311.689	Cannulated Tap	
312.01	2.8 mm Adjustable Parallel Wire Guide	

312.02	2.8 mm Trocar	
312.05	12.0 mm/8.5 mm Protection Sleeve	
312.07	Variable Angle Wire Guide	
312.08	8.5 mm/2.8 mm Wire Sleeve	
312.09	15.5 mm/13.0 mm Washer Sleeve	

312.692	Multiple Wire Guide	
312.694	2.8 mm Trocar, for Multiple Wire Guide	
313.93	Solid Hexagonal Screwdriver, 4.0 mm width across flats	
314.04	Solid Hexagonal Screwdriver Shaft, 4.0 mm width across flats	
314.05	Cannulated Hexagonal Screwdriver, 2.9 mm cannulation, 4.0 mm width across flats	
314.11	Holding Sleeve	

314.23	Cannulated Hexagonal Screwdriver Shaft	
319.24	2.9 mm Cleaning Brush	
319.46	2.8 mm Cleaning Stylet	
319.70	Cannulated Screw Measuring Device	
319.97	Screw Forceps	
338.49	Large Quick Coupling	

Cannulated Screw Instrument and Implant Sets

Sets

105.180	6.5 mm Cannulated Screw Instrument and Implant Set (consists of Graphic Case 690.379, Screw Racks 690.375.60 and 690.375.70, and Screw Sets 105.181 and 105.182)
105.185	7.3 mm Cannulated Screw Instrument and Implant Set (consists of Graphic Case 690.380, Screw Racks 690.375.40 and 690.375.50, and Screw Sets 105.186 and 105.187)
105.190	6.5 mm and 7.3 mm Combined Cannulated Screw Instrument and Implant Set (consists of Graphic Case 690.375, Screw Racks 690.375.50 and 690.375.70, and Screw Sets 105.181 and 105.186)
145.180	6.5 mm Titanium Cannulated Screw Instrument and Implant Set (consists of Graphic Case 690.379, Screw Racks 690.375.60 and 690.375.70, and Titanium Screw Sets 145.181 and 145.182)
145.185	7.3 mm Titanium Cannulated Screw Instrument and Implant Set (consists of Graphic Case 690.380, Screw Racks 690.375.40 and 690.375.50, and Titanium Screw Sets 145.186 and 145.187)
145.190	6.5 mm and 7.3 mm Titanium Combined Cannulated Screw Instrument and Implant Set (consists of Graphic Case 690.375, Screw Racks 690.375.50 and 690.375.70, and Titanium Screw Sets 145.181 and 145.186)

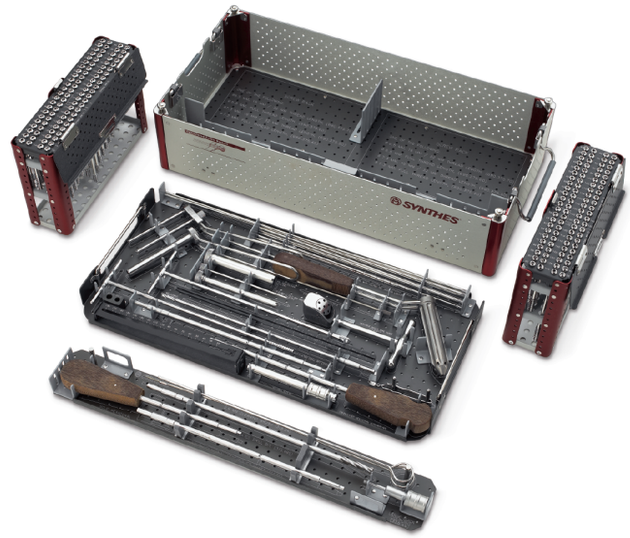

Note: For additional information, please refer to package insert.

For detailed cleaning and sterilization instructions, please refer to www.depuysynthes.com/hcp/cleaning-sterilization or sterilization instructions, if provided.

The 6.5 mm and 7.3 mm cannulated screws are available in six different instrument and implant sets, three with stainless steel screws and three with titanium. Each set includes the same set of instruments, but a different combination of two screw sets.

Set Name	6.5 mm Partially Threaded Screws	6.5 mm Fully Threaded Screws	7.3 mm Partially Threaded Screws	7.3 mm Fully Threaded Screws
6.5 mm Cannulated Screw Instruments and Implant Set	x	x		
7.3 mm Cannulated Screw Instruments and Implant Set			x	x
6.5 mm and 7.3 mm Combined Cannulated Screw Instruments and Implant Set	x		x	

Instruments (included in all the instrument and implant sets listed on page 18)

292.68	2.8 mm Threaded Guide Wire, 300 mm, 10 ea.
310.495	7.3 mm Cannulated Drill Bit, large quick coupling, 300 mm, 2.9 mm cannulation
310.63	5.0 mm Cannulated Drill Bit, large quick coupling, 300 mm, 2.9 mm cannulation
310.78	Cannulated Countersink, for 6.5 mm and 7.3 mm Cannulated Screws
311.689	Cannulated Tap for 6.5 mm and 7.3 mm Cannulated Screws, 275 mm/200 mm tap depth
312.01	2.8 mm Adjustable Parallel Wire Guide
312.02	2.8 mm Trocar, for use with 5.0 mm/ 2.8 mm Wire Sleeve (312.03)
312.05	12.0 mm/8.5 mm Protection Sleeve
312.07	Variable Angle Wire Guide
312.08	8.5 mm/2.8 mm Wire Sleeve
312.09	15.5 mm/13.0 mm Washer Sleeve
312.692	Multiple Wire Guide, for use with 2.8 mm Threaded Guide Wire
312.694	2.8 mm Trocar, for use with Multiple Wire Guide
313.93	Solid Hexagonal Screwdriver, 4.0 mm width across flats, for removal of 7.3 mm Cannulated Screws
314.04	Solid Hexagonal Screwdriver Shaft, 4.0 mm width across flats, 270 mm, for removal of 7.3 mm Cannulated Screws
314.05	Cannulated Hexagonal Screwdriver, 2.9 mm cannulation, 4.0 mm width across flats
314.11	Holding Sleeve, for use with Hexagonal Screwdriver
314.23	Cannulated Hexagonal Screwdriver Shaft, 2.9 mm cannulation, 4.0 mm width across flats, 270 mm
319.24	2.9 mm Cleaning Brush
319.46	2.8 mm Cleaning Stylet
319.70	Cannulated Screw Measuring Device
319.97	Screw Forceps
338.49	Large Quick Coupling

Cannulated Screw Implant Sets

Each instrument and implant set (listed on page 18) includes two of the following cannulated screw implant sets

105.181/ 145.181 — 6.5 mm Partially Threaded Cannulated Screw Set, consisting of:

6.5 mm Cannulated Screws, 16 mm thread

Stainless Steel	Titanium	Length (mm)	Qty.
208.401	408.401	30	2
208.402	408.402	35	2
208.403	408.403	40	2
208.404	408.404	45	2
208.405	408.405	50	2
208.406	408.406	55	2
208.407	408.407	60	2
208.408	408.408	65	2
208.409	408.409	70	2
208.410	408.410	75	2
208.411	408.411	80	4
208.412	408.412	85	4
208.413	408.413	90	4
208.414	408.414	95	2
208.415	408.415	100	2
208.416	408.416	105	2
208.417	408.417	110	2
208.418	408.418	115	2
208.419	408.419	120	2
208.420	408.420	125	2
208.421	408.421	130	2
208.422	408.422	135	1
208.423	408.423	140	1
208.424	408.424	145	1
208.425	408.425	150	1

6.5 mm Cannulated Screws, 32 mm thread

Stainless Steel	Titanium	Length (mm)	Qty.
208.431	408.431	45	2
208.432	408.432	50	2
208.433	408.433	55	2
208.434	408.434	60	2
208.435	408.435	65	2
208.436	408.436	70	2
208.437	408.437	75	2
208.438	408.438	80	2
208.439	408.439	85	2
208.440	408.440	90	2
208.441	408.441	95	2
208.442	408.442	100	2
208.443	408.443	105	2
208.444	408.444	110	2
208.445	408.445	115	2
208.446	408.446	120	2
208.447	408.447	125	2
208.448	408.448	130	2
208.449	408.449	135	1
208.450	408.450	140	1
208.451	408.451	145	1
208.452	408.452	150	1

219.99	419.99	Washer, 13.0 mm, 6 ea.

105.186/ 145.186 — 7.3 mm Partially Threaded Cannulated Screw Set, consisting of:

7.3 mm Cannulated Screws, 16 mm thread

Stainless Steel	Titanium	Length (mm)	Qty.
208.830	408.830	30	2
208.835	408.835	35	2
208.840	408.840	40	2
208.845	408.845	45	2
208.850	408.850	50	2
208.855	408.855	55	2
208.860	408.860	60	2
208.865	408.865	65	2
208.870	408.870	70	2
208.875	408.875	75	2
208.880	408.880	80	4
208.885	408.885	85	4
208.890	408.890	90	4
208.895	408.895	95	2
208.900	408.900	100	2
208.905	408.905	105	2
208.910	408.910	110	2
208.915	408.915	115	2
208.920	408.920	120	2
208.925	408.925	125	2
208.930	408.930	130	2
208.935	408.935	135	1
208.940	408.940	140	1
208.945	408.945	145	1
208.950	408.950	150	1

7.3 mm Cannulated Screws, 32 mm thread

Stainless Steel	Titanium	Length (mm)	Qty.
209.845	409.845	45	2
209.850	409.850	50	2
209.855	409.855	55	2
209.860	409.860	60	2
209.865	409.865	65	2
209.870	409.870	70	2
209.875	409.875	75	2
209.880	409.880	80	2
209.885	409.885	85	2
209.890	409.890	90	2
209.895	409.895	95	2
209.900	409.900	100	2
209.905	409.905	105	2
209.910	409.910	110	2
209.915	409.915	115	2
209.920	409.920	120	2
209.925	409.925	125	2
209.930	409.930	130	2
209.935	409.935	135	1
209.940	409.940	140	1
209.945	409.945	145	1
209.950	409.950	150	1

219.99	419.99	Washer, 13.0 mm, 6 ea.

105.182/ 145.182 — 6.5 mm Fully Threaded Cannulated Screw Set, consisting of:

6.5 mm Cannulated Screws, fully threaded, 4 ea.

Stainless Steel	Titanium	Length (mm)
208.460	408.460	20
208.461	408.461	25
208.462	408.462	30
208.463	408.463	35
208.464	408.464	40
208.465	408.465	45
208.466	408.466	50
208.467	408.467	55
208.468	408.468	60
208.469	408.469	65
208.470	408.470	70
208.471	408.471	75
208.472	408.472	80
208.473	408.473	85
208.474	408.474	90
208.475	408.475	95
208.476	408.476	100
208.477	408.477	105
208.478	408.478	110
208.479	408.479	115
208.480	408.480	120
208.481	408.481	125
208.482	408.482	130

219.99 — 419.99 — Washer, 13.0 mm, 6 ea.

105.187/ 145.187 — 7.3 mm Fully Threaded Cannulated Screw Set, consisting of:

7.3 mm Cannulated Screws, fully threaded, 4 ea.

Stainless Steel	Titanium	Length (mm)
209.620	409.620	20
209.625	409.625	25
209.630	409.630	30
209.635	409.635	35
209.640	409.640	40
209.645	409.645	45
209.650	409.650	50
209.655	409.655	55
209.660	409.660	60
209.665	409.665	65
209.670	409.670	70
209.675	409.675	75
209.680	409.680	80
209.685	409.685	85
209.690	409.690	90
209.695	409.695	95
209.700	409.700	100
209.705	409.705	105
209.710	409.710	110
209.715	409.715	115
209.720	409.720	120
209.725	409.725	125
209.730	409.730	130

219.99 — 419.99 — Washer, 13.0 mm, 6 ea.

Also Available

Instruments

03.100.105	Solid Hex Screwdriver Shaft, 200 mm, 4.0 mm width across flats
03.100.106	Cannulated 4.0 mm Hexagonal Screwdriver Shaft, 200 mm
292.81	2.8 mm Guide Wire with flutes (nonthreaded), 300 mm, 200 mm calibration
900.726	2.8 mm Threaded Guide Wire, trocar point, 450 mm, 300 mm calibration

Implants

6.5 mm Cannulated Screws

	Thread length (mm)	Length (mm)
208.426	16	160
208.427	16	170
208.428	16	180
208.453	32	160
208.454	32	170
208.455	32	180
208.483	fully threaded	140
208.484	fully threaded	150
208.485	fully threaded	160
208.486	fully threaded	170
208.487	fully threaded	180

6.5 mm Titanium Cannulated Screws

	Thread length (mm)	Length (mm)
408.426	16	160
408.427	16	170
408.428	16	180
408.453	32	160
408.454	32	170
408.455	32	180
408.483	fully threaded	140
408.484	fully threaded	150
408.485	fully threaded	160
408.486	fully threaded	170
408.487	fully threaded	180

Limited Warranty and Disclaimer: DePuy Synthes products are sold with a limited warranty to the original purchaser against defects in workmanship and materials. Any other express or implied warranties, including warranties of merchantability or fitness, are hereby disclaimed.

Please also refer to the package insert(s) or other labeling associated with the devices identified in this surgical technique for additional information.

CAUTION: Federal Law restricts these devices to sale by or on the order of a physician.

Some devices listed in this surgical technique may not have been licensed in accordance with Canadian law and may not be for sale in Canada. Please contact your sales consultant for items approved for sale in Canada.

Not all products may currently be available in all markets.

DePuy Synthes

PART OF THE Johnson & Johnson FAMILY OF COMPANIES

Manufactured or distributed by:

Synthes USA Products, LLC
1302 Wrights Lane East
West Chester, PA 19380

Synthes USA, LLC
1101 Synthes Avenue
Monument, CO 80132

To order (USA): 800-523-0322
To order (Canada): 844-243-4321

Note: For recognized manufacturer, refer to the product label.

www.depuysynthes.com

© DePuy Synthes 2003—2018. All rights reserved.
DSUS/TRM/0916/1080(1) 02/18 DV